Peter Oppermann, Lennart Dorendorf, Benjamin Boll, Abedin Gagani, Nikolay Lalkovski, Christian Renner, Marcus Rutner, Robert Meißner, and Bodo Fiedler. Towards Structural Health Monitoring using Vibro-Acoustic Modulation in the Real World. In Proc. of the 18th GI/ITG KuVS Fachgespräch Sensornetze, FGSN'19, Magdeburg, Germany, Sept. 2019.

Towards Structural Health Monitoring using Vibro-Acoustic Modulation in the Real World

Peter Oppermann*, Lennart Dorendorf†, Benjamin Boll‡, Abedin Gagani‡, Nikolay Lalkovski†, Christian Renner*, Marcus Rutner†, Robert Meißner‡§, Bodo Fiedler‡

* *Institute smartPort, Hamburg University of Technology*

† *Institute for Metal and Composite Structures, Hamburg University of Technology*

‡ *Institute of Polymer and Composites, Hamburg University of Technology*

§ *MagIC - Magnesium Innovation Centre, Institute of Materials Research, Helmholtz Centre for Materials and Coastal Research*

***Abstract*—In this paper, we explore the opportunities and challenges of deploying a Wireless Sensor Network to monitor the structural health of civil infrastructure using Vibro-Acoustic Modulation. We explain the fundamentals of the method and investigate the challenges for a sensor network in a practical implementation. Ideas and requirements for the sensor nodes are analyzed and presented.**

***Index Terms*—energy harvesting, vibration sensing, wireless sensor networks**

I. Introduction

Vibro-Acoustic Modulation (VAM) is a non-linear non-destructive testing (NNDT) technique to evaluate the structural integrity of solid materials. It has first been introduced in 1998 in [3]. Since then several research groups have successfully detected fatigue damage in a material using VAM, even before a defect is visible to the bare eye [4].

One potential application for VAM is preventive maintenance of civil infrastructure such as bridges or wind turbines. Not only can continuous monitoring help to prevent collapses and save lives, but it can also reduce maintenance cost drastically. Manual inspection is carried out rarely and is costly, time-consuming, and error-prone. Moreover, the early detection of small defects usually allows for simpler and smaller repairs.

A self-powered Wireless Sensor Network (WSN) leverages the potential of VAM-implementations on real-world structures. Because of the complexity of many structures, several sensors in different places are needed for checking all fundamental structural elements, which calls for low-cost hardware. Both sensors and actuators need to synchronize themselves, and nodes need to transmit measurements to a central place for evaluation. Cable-bound communication and power would drastically increase the cost of deployment. Therefore, an energy harvesting solution is preferable.

In the context of the I^3-Lab program at the Hamburg University of Technology we, an interdisciplinary team of researchers from structural engineering, material science, and computer science aim to improve the method's reliability and to enable applicability on a real physical structure eventually. During this four-year project, we want to gain new insights in the early process of crack formation through VAM and try to improve the method's prediction capabilities using artificial intelligence. To finally develope a prototype of a WSN on a real structure, we will also work on applying and improving methods from the fields of energy harvesting and transient computing.

In the remainder of the paper, we briefly introduce the VAM method and the underlying principles in Section II. Section III will explain the research questions related to WSNs that need to be addressed during the project. Further, we will give an overview of our first steps in Section IV and lay out planned work for the future in Section V.

This work has been supported by the agency for science, research and gender equality of the city of Hamburg (BWFG, Behörde für Wissenschaft, Forschung und Gleichstellung).

II. Vibro-Acoustic Modulation

The VAM-method uses two sinusoidal signals which are applied to a solid specimen under test (SUT) simultaneously and continuously. The first signal, which we refer to as the modulating signal X_Ω, has a low frequency Ω, and a high amplitude A_Ω. The other signal, which we refer to as the carrier signal X_ω has a much higher frequency ω and a much lower amplitude A_ω.

In a specimen with perfectly linear material behavior, we would only observe a superposition of the two signals and the power spectrum of the resulting signal Y will consist of two bars only (see Fig. 1, left). However, in the presence of defects with nonlinear stiffness properties, e.g. cracks (whose contact area, and thus stiffness, will be varied by the modulating signal), additional sidebands will evolve in the power spectrum at frequencies $\omega \pm \Omega$ (see Fig. 1, right). In other words, a modulation of the carrier signal will be observed.

The modulation of the carrier correlates with the presence and growth of fatigue damage [3]. Figure 2 shows a power spectrum observed in an aluminum specimen after 4000 load cycles. The sidebands at $\omega \pm \Omega$ can be seen clearly, and the modulation index is visualized. We describe the exact setup of the experiment in Section IV-A.

To measure the intensity of modulation, the Modulation Index (MI) [2] can be calculated from the power spectrum.

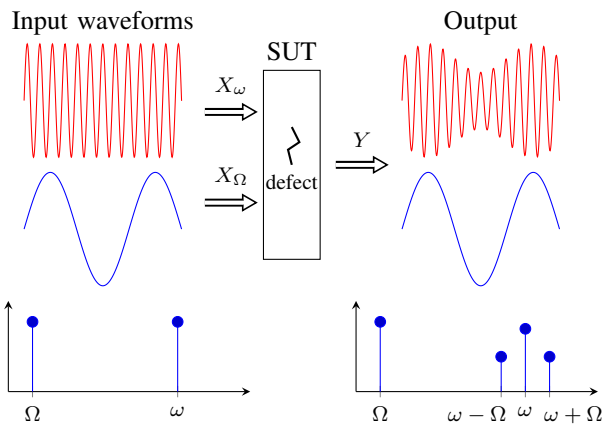

Fig. 1. The carrier signal X_ω is modulated due to nonlinear properties of a crack in the SUT (top). This leads to sidebands emerging in the spectrum of Y (bottom). X_Ω travels through the SUT unchanged

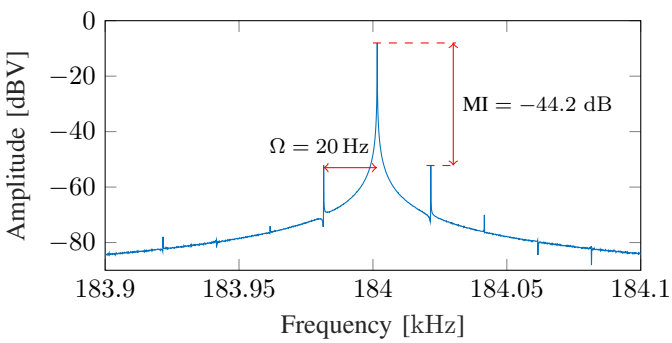

Fig. 2. Power spectrum of a signal recorded with a specimen after 4000 load cycles. Sidebands emerge next to the peak at ω.

MI gives the ratio of the Carrier-Amplitude and the Sidebands-Amplitude in dB (see Fig. 2).

Recent research in [2] suggests analyzing the modulation of the carrier in the time domain instead of the frequency domain. This approach might allow the separation of different modulation types, such as amplitude modulation (AM) and frequency modulation (FM), leading to superior evaluation techniques for VAM that are yet to investigate.

III. Research Challenges

Several limitations still have to be overcome to take VAM from the laboratory to a structure in the real world: Knowledge about the influence of specimen geometry, boundary conditions, sensor positioning and structural (not defect-related) nonlinearities on the method's reliability is still mostly lacking. A further major challenge is the current lack of an efficient sensor network. It is the latter challenge that we will primarily address in this article.

In general, we assume to have many nodes that record the modulated signal Y in different locations on the structure, while one of the nodes will be generating X_ω. Because of the advantages mentioned in Section I, we aim to build self-sustained nodes and use wireless transmission of results to a base station.

A. Signal Creation and Sensing

Both the generation of X_ω as well as the sensing of Y happen in the same frequency range since $\omega \gg \Omega$. In [3] ω is in the order of 100 kHz. The exact frequency is chosen by performing a sweep over a range of frequencies and choosing the one that yields the biggest amplitude in Y, which is one resonance frequency of the SUT. Piezoceramic discs can be used both for exciting the material as for sensing in this frequency range. We have conducted first experiments with aluminum specimens, where we observed a strong response Y when applying X_ω with a resonant ω. However, it is still an open question how this scales with bigger dimensions and more complex geometry of the SUT.

Generating the vibration X_Ω in the structure is more challenging. In previous studies in [3] and [2] it has been chosen to be as low as 10 Hz. Moreover, the amplitude of the vibration A_Ω effects the intensity of the modulation that we wish to measure [4]. Hence, a high A_Ω is preferable to produce a strong modulation. Unfortunately, this demands an amount of energy that is hard to supply with a self-powered embedded system. Therefore, we plan to use the vibrations that are already present in the structure. Recent studies in [9] and [5] report vibrations introduced into bridges by passing traffic peaking in the range of 3 Hz to 20 Hz and persisting for several seconds. However, these vibrations are significantly different from the laboratory conditions since they are not a sinusoidal wave at a single frequency. They vary in frequency and amplitude depending on the traffic. The exact effect of a varying X_Ω on Y has to be investigated to reach comparable modulation indexes over multiple measurements.

B. Low-Frequency Detection and Synchronization

As discussed in Section III-A we rely on naturally occurring vibrations in the structure as X_Ω. To avoid performing unusable measurements and wasting energy, we hence need to reliably detect a vibration that is strong enough to produce significant modulation on X_ω in the presence of defects. Only then it makes sense for a sensor node to generate X_ω. Since these vibration events only last for a short time and are clearly irregular and potentially rare, an energy-conserving mechanism has to be employed to detect the presence of a sufficiently strong vibration without actively and continuously checking. Further, due to the dependence of the modulation on the vibration's amplitude, A_Ω has to be measured or estimated.

In the same way, the sensors recording Y need to know when to start their recording of the signal. Therefore, also an energy-conserving way needs to be developed for the generating node to trigger the recording at the receiving nodes.

C. Computation and Networking

Requirements for communication between nodes and between nodes and a base station strongly depend on the features that are chosen to assess structural integrity. Ideally, features,

e.g., the modulation index can be extracted already on the node, which would drastically reduce the amount of data that has to be transferred from the nodes to the base station. If, however, more sophisticated algorithms prove to be superior in assessing structural integrity, transfer of the whole time series to the base station might be necessary. This requires higher data rates and increases the energy demand of the nodes compared to single features.

In any case, the recording nodes need to transmit their results to a base station, where they can be processed and finally inspected by maintenance personnel. This base station does not need to be permanently available, but could also be just a maintenance car, that drives by the structure in irregular intervals and checks the current state of the structure.

D. Energy Harvesting

Since the sensor nodes will be distributed across the structure, they may be on hard to reach places. Therefore, self-powered nodes are beneficial to lower maintenance cost. In general, the application is well suited to energy harvesting, since the defects in the structure are expected to arise slowly over long periods. Therefore, duty cycling with long charging periods is tolerable.

The described method is relying on naturally occurring vibrations, which makes vibrational energy harvesting an appealing possibility. In case of highway bridges, [7] and [5] have reported average power of vibrational energy harvesting between $300\,\mu\mathrm{W}$ and $660\,\mu\mathrm{W}$ in high traffic times, and [9] even reports peak power of $12.5\,\mathrm{mW}$. Unfortunately, the real energy requirement of the application will only become clear during the project runtime as we answer the open research question. Thus, we cannot say yet if vibrational energy harvesting alone will be sufficient. In any case, also solar or wind can be taken into account as energy sources; however, this would either limit the places where the sensors can be deployed on the structure or require more cabling to mount the solar cells or wind harvesters in more appropriate locations.

IV. Preliminaries

A. Reproduce VAM Method

To reliably reproduce the results from [3], we set up an experiment with an aluminum specimen in a tensile testing machine sketched in Fig. 3. The specimen has a notch in the middle to predetermine the cross-section of fatigue failure. Two piezoceramic discs were attached to the probe using an epoxy adhesive. A signal generator and an amplifier are used to produce X_ω with amplitude $A_\omega = 50\,\mathrm{V_{pp}}$ and frequency $\omega = 184\,\mathrm{kHz}$. At the same time, the tensile testing machine generates X_Ω by applying a periodical tensile force between max. $1.25\,\mathrm{kN}$ and min. $0\,\mathrm{kN}$ with $\Omega = 20\,\mathrm{Hz}$ to the specimen. Finally, an oscilloscope is used to record the voltage Y produced by the other piezoceramic disc.

Using this setup, we conducted experiments applying many load cycles with the tensile testing machine and performing a measurement every 2000 load cycles. Then we calculated MI from the measurement as described in Section II. Figure 4

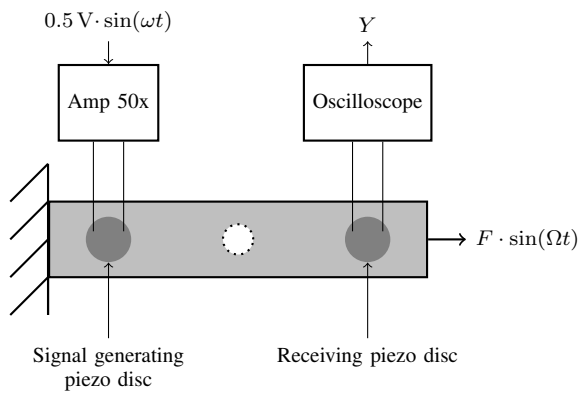

Fig. 3. The experiment setup. Two piezo discs are applied onto an aluminum specimen with a predetermined breaking point. One to generate the carrier signal X_ω and one to measure the modulated signal Y in the specimen.

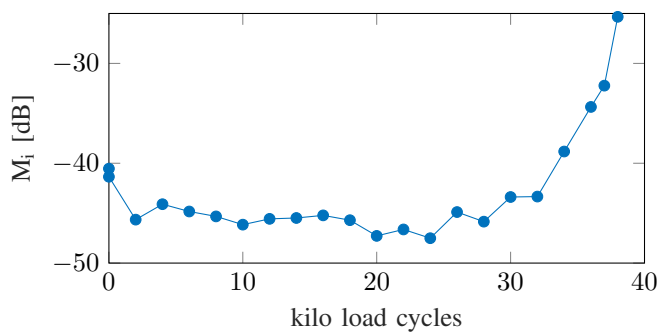

Fig. 4. The modulation index MI in our experiment increased strongly during the last 8000 load cycles. The specimen broke after 39 000 cycles.

shows MI vs the number of load cycles. A strong increase can be seen in the last 8000 load cycles before the specimen finally broke after 39 000 cycles.

B. Low-Frequency Detection

To monitor the structure under test for low-frequency vibrations, we have constructed a low-power sensor, that can wake up a microcontroller from sleep mode in the presence of a sufficiently strong vibration X_Ω. It consists of a small vibrational energy harvester with a circuit to detect an increasing charge on a capacitor.

As voltage source, we have used a cantilevered piezo stripe. This resembles a spring-mass-damper system, which can be tuned for certain resonance frequencies [6] by varying weight and lever length. However, as [1] shows, the efficiency of vibrational energy harvesting in resonance is inversely proportional to the cube of the resonance frequency ω_0. Therefore, even if the structure under test has a resonance frequency under $10\,\mathrm{Hz}$, the power yield of our system is bigger, if tuned to higher frequencies. Also, to harvest enough energy despite the lower frequencies, bigger amplitudes of the cantilever and a greater weight have to be employed, which results in bigger dimensions. Our prototype is shown in Fig. 5. By manual

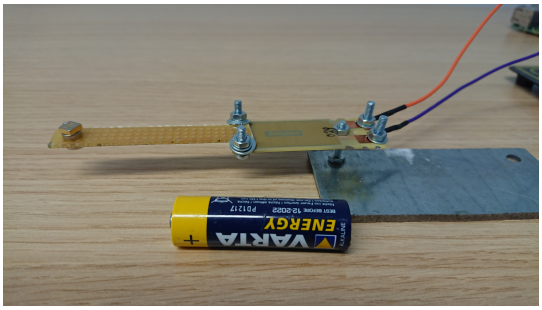

Fig. 5. The cantilevered vibrational energy harvester. For size comparison, a standard AA battery is placed next to the harvester.

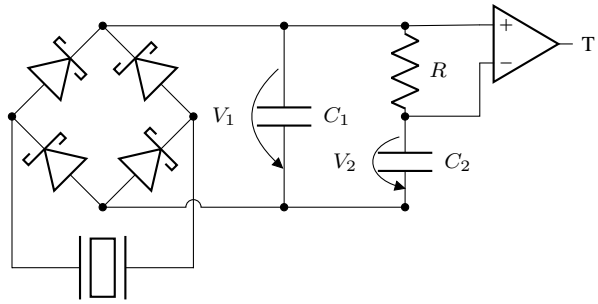

Fig. 6. The trigger circuit has a bridge rectifier. The rectifier's output directly charges C_1. The voltage V_2 on C_2 is low-pass filtered. Therefore, $V_1 > V_2$ on an increase of rectifier output and $V_1 < V_2$ on a decrease of rectifier output.

optimization, we settled with a weight and lever length tuning the system to approximately $27\,\mathrm{Hz}$.

Figure 6 shows the circuit used for harvesting inspired by [8]. A bridge rectifier is used to load the capacitor C_1. Since the piezo only produces small voltages in the range of a few hundred mV, we use Shottky-diodes, which are best suited for this application due to their low forward voltage drop [11]. When vibration increases and the voltage V_1 rises, C_2 is charged over R. A comparator is used to detect the voltage drop across R and produces a logic one while a current is flowing into C_2. Whenever vibration decreases, V_1 will drop. This drop happens due to the reverse leakage current of the diodes in the rectifier. In this case, the current will flow inversely from C_2 to C_1 and the voltage drop over R will also be inverted and the comparator will output a logic zero. This circuit has the advantage that it adapts to constant low vibration level and only triggers when the vibration rises over the usual level. The comparator output T can then be used to wake up the sensor node from a low-power mode, once vibration is sufficient.

The comparator is an active element that consistently draws current. However, using an ultra-low power device such as the TS882 [10], the typical active current is only $220\,\mathrm{nA}$. For comparison, a low-power microcontroller already draws currents in the range of several microamperes in sleep mode. Therefore, this detection mechanism is much more energy-conserving than actively measuring the vibrations, even when duty cycling.

The sensitivity and rise time of the trigger is tunable by the parameters C_1, R and C_2. The only hard constraint to the sensitivity is the hysteresis of the comparator, which has a maximum specified value of $4.2\,\mathrm{mV}$.

V. Future Work

Starting from our experimental setup, in which we reproduced the VAM method, we are currently exploring ways to limit the energy demand of the method. First tests with an oscilloscope suggest that such high signal strengths are not necessary. With a $1.6\,\mathrm{V_{pp}}$ excitation on the transmitting piezo, we could record a clear signal on the receiving piezo. It is still an open question, how well this scales with bigger and more complex specimen under test. Also, we will investigate how long the bursts of the signal need to be in order to produce reliable results.

As discussed in Section III-B, the sensor nodes need a way of synchronization to notify each other about the start of acoustic emission. Instead of using a low-power radio, one can reuse the piezos for notification. Once a node is ready to start an emission, it can just generate a small burst of a high-frequency acoustic signal. In the same manner, as the low-frequency detection in Section IV-B, the receiving nodes can employ a small harvester to produce an interrupt using their piezo discs. It has to be examined, however, how much energy this method demands and how this compares to traditional low-power radio.

Furthermore, tests must be conducted using the vibration detector on real structures like railway and highway bridges to evaluate how the parameters must be tuned in different scenarios to achieve the robustness and sensitivity needed.

References

[1] K. Ashraf, M. H. M. Khir, and J. O. Dennis. Energy harvesting in a low frequency environment. In *2011 National Postgraduate Conference*, 2011.

[2] Dimitri M. Donskoy and Majid Ramezani. Separation of amplitude and frequency modulations in Vibro-Acoustic Modulation Nondestructive Testing Method. *Proceedings of Meetings on Acoustics*, 34(1), 2018.

[3] Dimitri M. Donskoy and Alexander M. Sutin. Vibro-Acoustic Modulation Nondestructive Evaluation Technique. *Journal of Intelligent Material Systems and Structures*, 9(9), 1998.

[4] Philippe Duffour, Marco Morbidini, and Peter Cawley. A study of the vibro-acoustic modulation technique for the detection of cracks in metals. *The Journal of the Acoustical Society of America*, 119(3), 2006.

[5] Andrea Gaglione, David Rodenas-Herraiz, Yu Jia, Sarfraz Nawaz, Emmanuelle Arroyo, Cecilia Mascolo, Kenichi Soga, and Ashwin A. Seshia. Energy neutral operation of vibration energy-harvesting sensor networks for bridge applications. *Proceedings of the 2018 International Conference on Embedded Wireless Systems and Networks*, 2018.

[6] Lei Gu and Carol Livermore. Impact-driven, frequency up-converting coupled vibration energy harvesting device for low frequency operation. *Smart Materials and Structures*, 20(4), 2011.

[7] Yu Jia, Jize Yan, Sijun Du, Tao Feng, Paul Fidler, Campbell Middleton, Kenichi Soga, and Ashwin A Seshia. Real world assessment of an auto-parametric electromagnetic vibration energy harvester. *Journal of Intelligent Material Systems and Structures*, 29(7), 2018.

[8] Vincent Liu, Aaron Parks, Vamsi Talla, Shyamnath Gollakota, David Wetherall, and Joshua R. Smith. Ambient backscatter: Wireless communication out of thin air. In *Proceedings of the ACM SIGCOMM 2013 Conference on SIGCOMM*, pages 39–50. ACM, 2013.

[9] E. Sazonov, H. Li, D. Curry, and P. Pillay. Self-Powered Sensors for Monitoring of Highway Bridges. *IEEE Sensors Journal*, 9(11), 2009.

[10] STMicroelectronics. TS882, TS884. https://www.st.com/resource/en/datasheet/ts882.pdf. Accessed: 2019/06/11.

[11] Ming Yuan, Ziping Cao, and Jun Luo. Characterization the influences of diodes to piezoelectric energy harvester. *International Journal of Smart and Nano Materials*, 9(3), 2018.